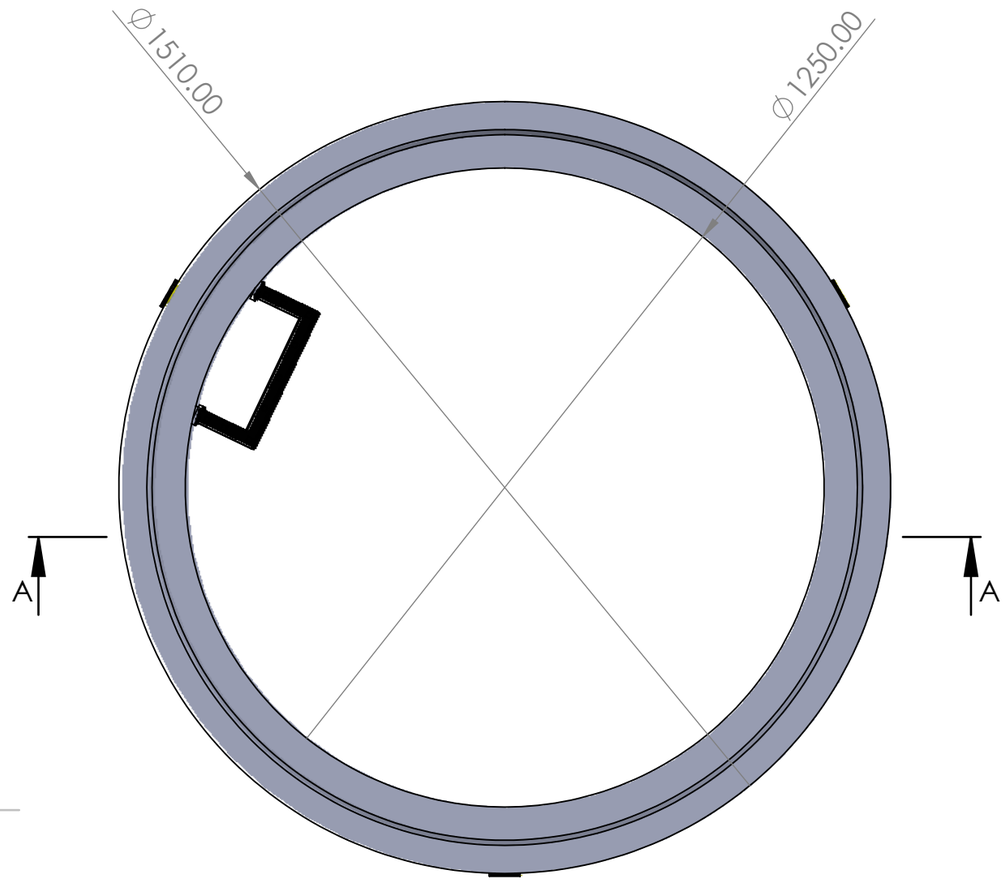

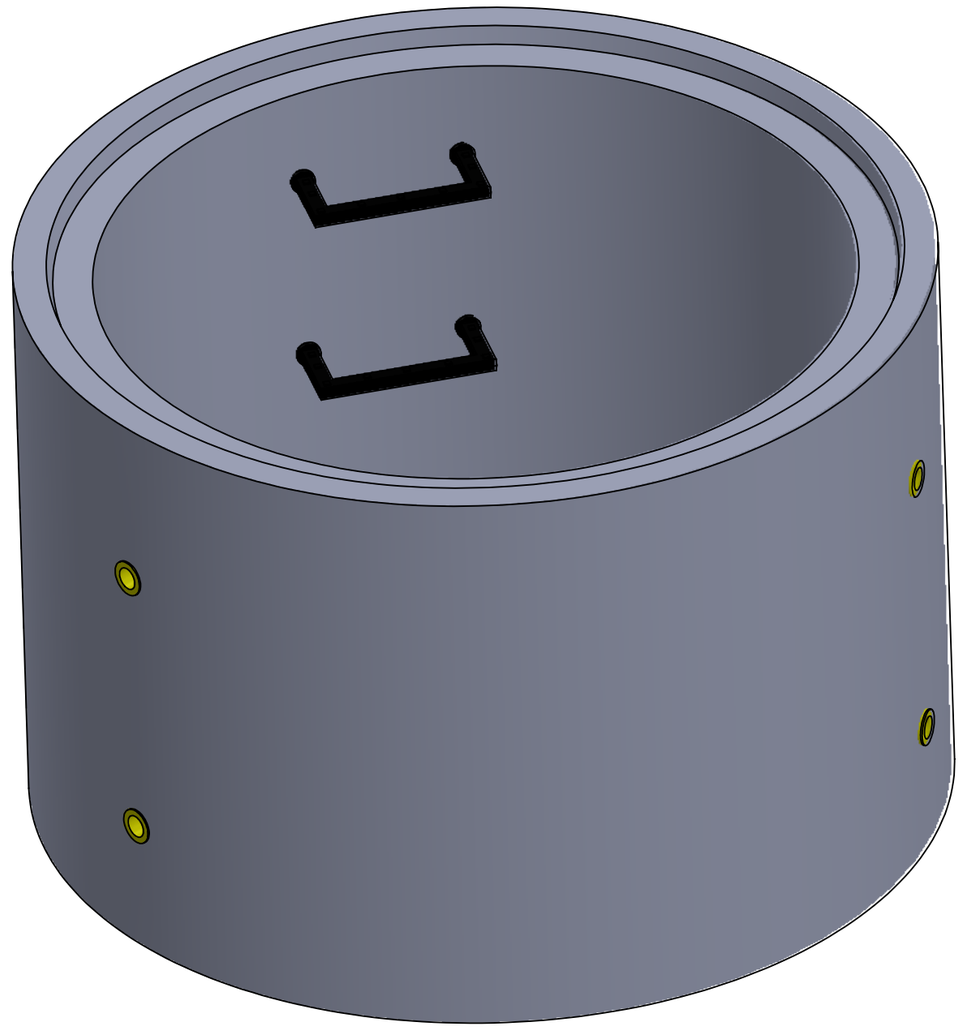

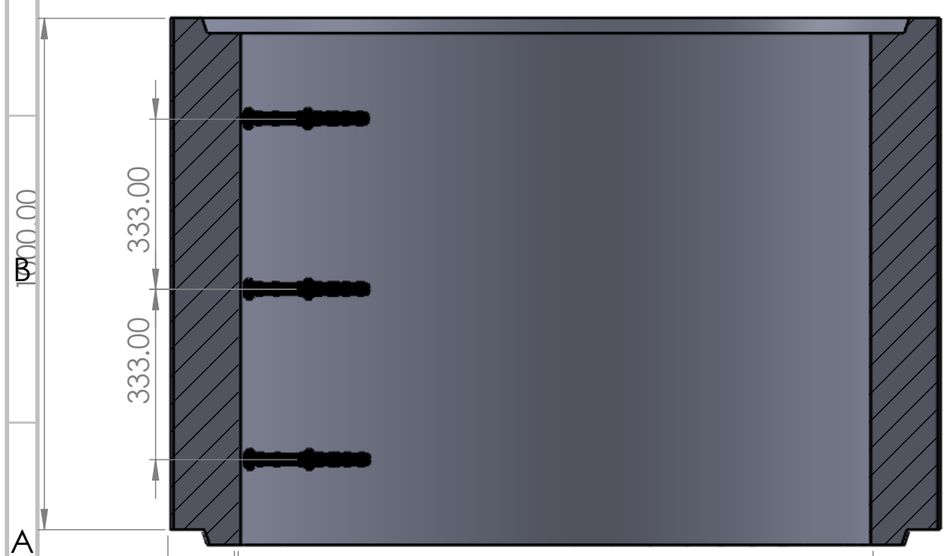

SECTION A-A
SCALE 1 : 12

UNLESS OTHERWISE SPECIFIED: DIMENSIONS ARE IN MILLIMETERS SURFACE FINISH: TOLERANCES: LINEAR: ANGULAR:	סוליד יציקות בע"מ			DEBURR AND BREAK SHARP EDGES	DO NOT SCALE DRAWING	REVISION
	NAME	SIGNATURE	DATE		TITLE: חוליה 125 גובה 100	
DRAWN						
CHK'D						
APPV'D						
MFG						
Q.A				MATERIAL:	DWG NO. 9123	A3
				WEIGHT:	SCALE:1:20	SHEET 1 OF 3